User Guide

Scan the QR code for more information or to contact us!

Applicability
Gas Stoves

General Safety & Warnings
FireAvert's Auto Shutoff prevents kitchen fires by automatically shutting off power or gas when a smoke alarm sounds. The Auto Shutoff is designed to reduce the risk of cooking fires, but it does not replace personal responsibility and safe cooking practices. Always read and follow all instructions before installing. Failure to do so may result in damage or injury.

NEVER install a damaged device, force connections, modify the device, or open it. Auto Shutoff devices should be used in temperatures between 4.4°C-37.8°C with humidity less than 80%. Avoid dusty environments.

WARNING: High Voltage. Follow basic precautions when working with electrical devices.

WARNING: Loud music or background noise may compromise or interfere with the response of the Auto Shutoff.

Protection Mode
When the smoke alarm sounds the Auto Shutoff waits 20-40 seconds before entering Protection Mode. When activated, the Auto Shutoff disconnects power, closes the gas solenoid, and the LED turns solid red.

Approved Smoke Alarms
Auto Shutoff devices will function correctly with any Australian or New Zealand Smoke Alarm approved to AS/NZS 3786. Any other Smoke Alarm should be tested for compatibility. In the event that a new Smoke Alarm or stove is installed in the home, the Auto Shutoff must be tested for compatibility and correct operation.

Orientation

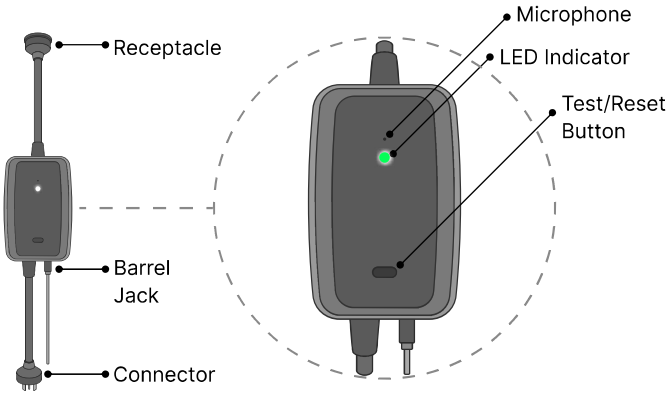

Safety Precautions:
- Ensure all gas connections are leak-tested before using the stove.
- Do not use open flames for leak testing; use non-corrosive gas leak test solution instead.
- Press the Auto Shutoff reset button after any power outage or circuit breaker reset.
- Ensure the stove is secure against the wall before turning on the circuit breaker.

How To Restore Gas Flow and Power After a Shutoff Event

1. Make sure all stove knobs are in the OFF position.
2. Switch OFF the circuit breaker to the stove at the switchboard for 10 seconds then switch back ON.
3. Press the RESET button on the front of the Auto Shutoff [if a solenoid is plugged in], or scan the QR code on the front of the stove and follow the prompts.

The reset is successful when the circuit breaker is turned ON, power has been restored to the stove, the RESET button on the gas Auto Shutoff has been pressed, and the LED indicator is GREEN.

NOTE: If the stove has a pilot light(s), it must be re-ignited after a shutoff event. Please refer to the stove manufacturer user guide for instructions.

Installation Steps

⚠ Important: Installation of the gas solenoid valve must be performed by a licensed gasfitter in accordance with local regulations

Step 1
Refer to Figure A
1. Switch OFF the circuit breaker to the range/stove at the switchboard and verify power is off.
2. Unplug the stove's cord and plug it into the receptacle on the Auto Shutoff. Insert the Auto Shutoff firmly into the outlet.

Step 2
1. Turn the main gas line valve to the OFF position.
2. Disconnect the stove/range gas line from the main gas line.

Step 3
Refer to Figure B
1. Insert non-beveled end of the adapter into the (gas out) side of the solenoid, applying pipe thread sealant to the male threads. Avoid sealant on opposing, beveled threads.
Note: the beveled threads will mate with the original stove flex hose.
2. Attach the male threaded end of the provided gas hose to the (gas in) side of the solenoid where the arrow is located, applying pipe thread sealant to the male threads.

Step 4
Refer to Figure B
1. Attach the other beveled female end of the gas hose to the main gas line. Use additional adapters if necessary.
2. Connect the gas line from the stove to the opposite reducer fitting on the solenoid.

Step 5
Refer to Figure B
Connect the power cable on the solenoid to the barrel jack connection on the Auto Shutoff.

Step 6
1. Switch ON the circuit breaker or isolation switch. The Auto Shutoff will enter Safety Mode (solid BLUE light).
2. Press the RESET button on the Auto Shutoff to allow gas and power to flow.
3. Turn the main gas line valve back to the ON position.

Step 7
1. Use non-corrosive gas leak test solution to check for leaks. If detected, turn off gas and tighten connections.
2. Wait at least 10 minutes before lighting pilots or turning on the stove.

Step 8
Push the stove back against the wall, ensuring no pinching of lines.

Test
Test the Auto Shutoff by turning the stove to full flame/ power and pressing the smoke alarm test button for about 1 minute. The Auto Shutoff should cut power within 20-40 seconds.

Installation is now complete!

Figure A

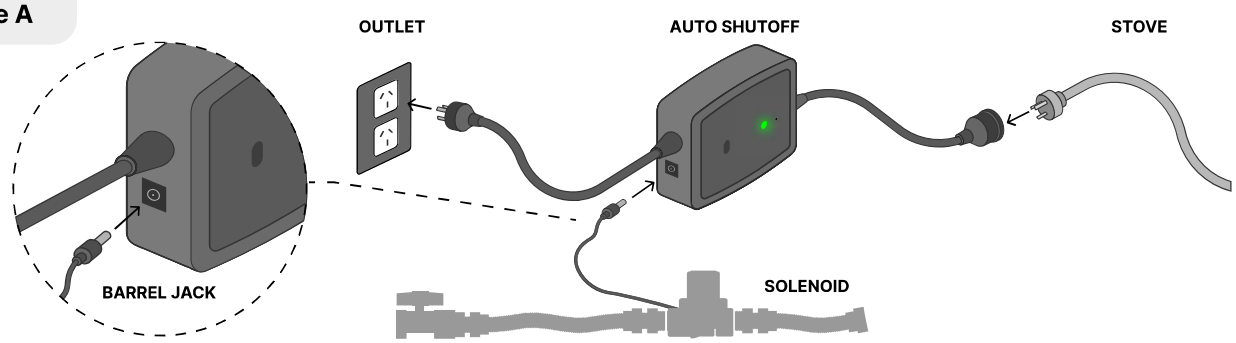

Figure B

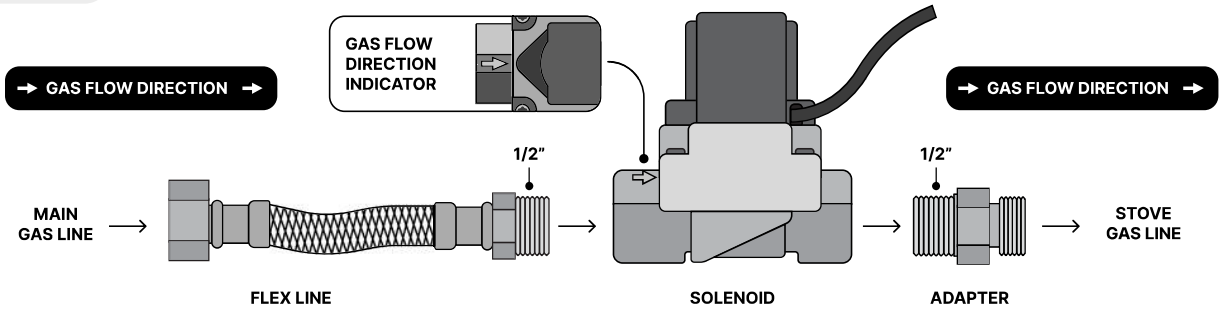

Contact

Web: fireavertaustralia.com.au
Email: enquiries@fireavertaustralia.com.au
Phone: +61 (0)419103429